Synthetic Flow Rate Meters
KM 35



Flow rate meters depend on the flow and not on the pressure

Operating Principle

Flow rate meters of the type KM 35 operate according to the float principle.
The actual flow rate can be read from the scale of the measuring tube situated at the largest diameter of the float.

Areas of Application

The meters can be used for measuring flow rates and monitoring liquid and gaseous media in closed tubes.

Application Limits

Temperature:
-20 °C to + 60 °C (PVC)
0 °C to + 75 °C (PA)
0 °C to + 100 °C (PSU)
-40 °C to + 110 °C (PVDF)

Pressure:
Maximum pressure PN 10 to 16 bar (depending on the material used and on the temperature).

Characteristic Features

- A great variety of measuring ranges are available
- 4 different materials provide for the operation with various flow media
- Options for accessories: limit contact and remote transmitter (only available with magnetic floats) via digital display of 0 to 100 % and additional control outputs 0 to 5 V respectively 0/4 to 20 mA
- 2 scales for water values available (l/min and %)
- Special scales and air scales can be provided upon request
- Scales can be exchanged subsequently
- Accuracy class 4 according to VDE / VDI 3513 page 2

Position

The device must be installed vertically with the medium flowing from bottom to top.

meister strömungstechnik gmbh

Installation

1. The instrument must be installed vertically in the flow circuit.

2. Flow direction is from bottom to top.

3. Flow media must be free of particle contamination, otherwise the instruments will not function properly.
   We recommend to use strainer SF, SFD or SFM.

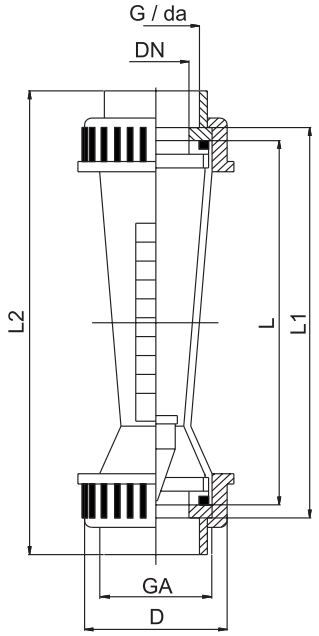

Summary of Types KM 35

Type	Measuring range l / h	Overall dimensions mm da	DN	L	L1	L2	D	GA	Option G	Δp mbar	Weight approx.g
KM 35-1,5	15 – 150	32	25	350	356	400	60	1 1/2”	1”	16,2	475
KM 35-3	30 – 300	32	25	350	356	400	60	1 1/2”	1”	16,2	475
KM 35-6	60 – 600	32	25	350	356	400	60	1 1/2”	1”	16,2	475
KM 35-10	100 – 1000	32	25	350	356	400	60	1 1/2”	1”	16,2	475
KM 35-15	150 – 1500	40	32	350	356	408	72	2“	1 1/4”	16,2	710
KM 35-20	200 – 2000	50	40	350	356	418	83	2 1/4”	1 1/2”	16,2	1050
KM 35-25	250 – 2500	40	32	350	356	408	72	2”	1 1/4”	16,2	710
KM 35-30	300 – 3000	50	40	350	356	418	83	2 1/4”	1 1/2”	16,2	1050
KM 35-40	400 – 4000	63	50	350	356	432	103	2 3/4”	2”	27,6	1530
KM 35-60	600 – 6000	63	50	350	356	432	103	2 3/4”	2”	27,6	1530
KM 35-100	1000 – 10000	63	50	350	356	432	103	2 3/4”	2”	27,6	1530
KM 35-150	1500 – 15000	75	65	350	356	432	122	3 1/2”	2 1/2”	40,7	2100
KM 35-250	2500 – 25000	75	65	350	356	432	122	3 1/2”	2 1/2”	40,7	2100
KM 35-500	10000 – 50000	75	65	350	356	432	122	3 1/2”	2 1/2”	40,7	2100

Standard exworks are glue-connections. Optional are threaded-connections available (refer to option-column G)

We reserve the right to carry out technical amendments

Pressure Temperature Diagram

The curves of the diagram present approximate values of the resistance of four different materials in relation to the operating temperature.
Pressure temperature curves are valid for a calculated life-time of 20 years.
Among other factors the creep strength of the different materials must be considered when determining the permissible operating pressure.
As far as these details or operating temperatures under 0 °C are concerned, we ask you to inform us about the exact operating conditions.

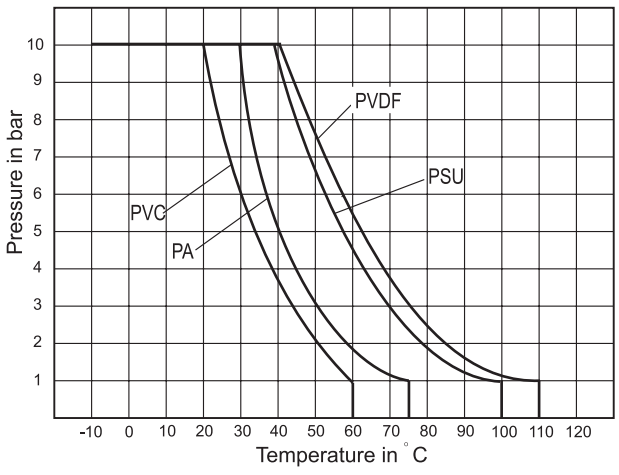

meister strömungstechnik
Im Gewerbegebiet 2 · D – 63831 Wiesen

Telefon : 0 60 96 / 97 20 - 0
Telefax : 0 60 96 / 97 20 - 30
E - Mail: Info@meister–flow.com
Internet: http://www.meister–flow.com